变更标记	日 期	变 更 内 容	签 名	核 准

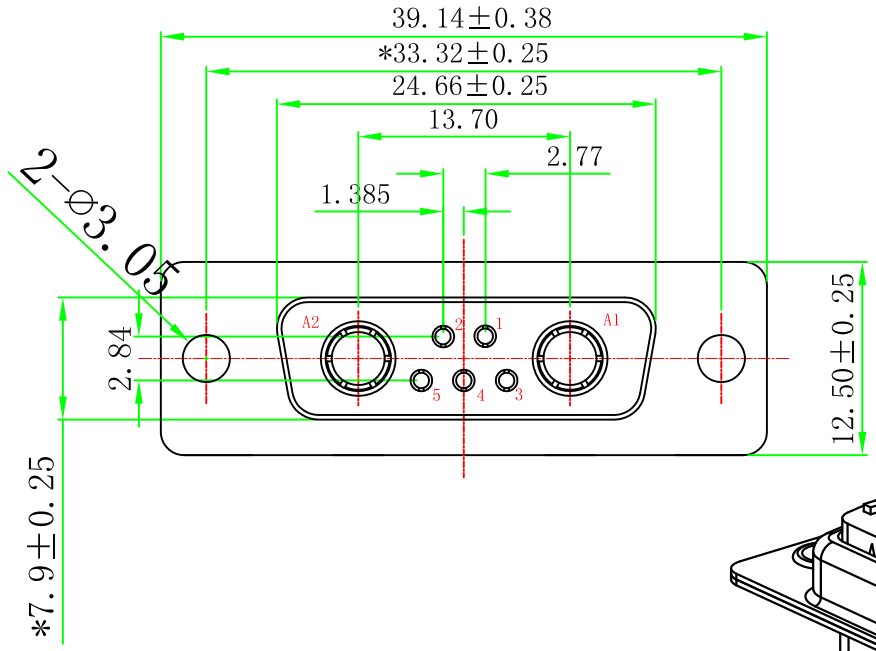

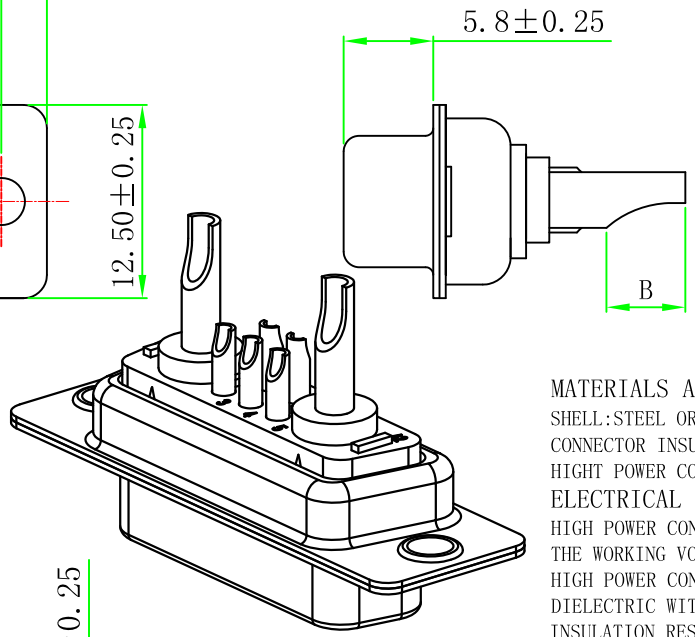

005- 07 2 02 x xx 3 x 01

Plastic color:
1=Black
2=Blue
3=White

Pin electroplating:
01= 1u″ gold
02= 2u″ gold
03= 3u″ gold
04= 5u″ gold
05= 15u″ gold

CURRENT:
1=10A
2=20A
3=30A
4=40A

MATERIALS AND FINISH

SHELL:STEEL OR COPPER ALLOY MATERIAL,Tin/Ni OR Au FINISHED.
CONNECTOR INSULATOR:PBT THERMOPLASTIC,30% GLASS FILLED,UL 94V-0 RATED.
HIGHT POWER CONTACT :COPPER ALLOY MATERIAL,GOLD PLATED.

ELECTRICAL CHARACTERISTICS

HIGH POWER CONTACT CURRENT RATING:10,20,30 OR 40 AMPS.
THE WORKING VOLTAGE:300V.
HIGH POWER CONTECT RESISTANCE:2.7 MILLIOHMS MAX.
DIELECTRIC WITHSTANDING VOLTACE:1000 V AC FOR 1 MINUTE.
INSULATION RESISTANCE:2000 MEGAOHMS MIN.
TEMPERATURE RATING:-55° ~+125° .

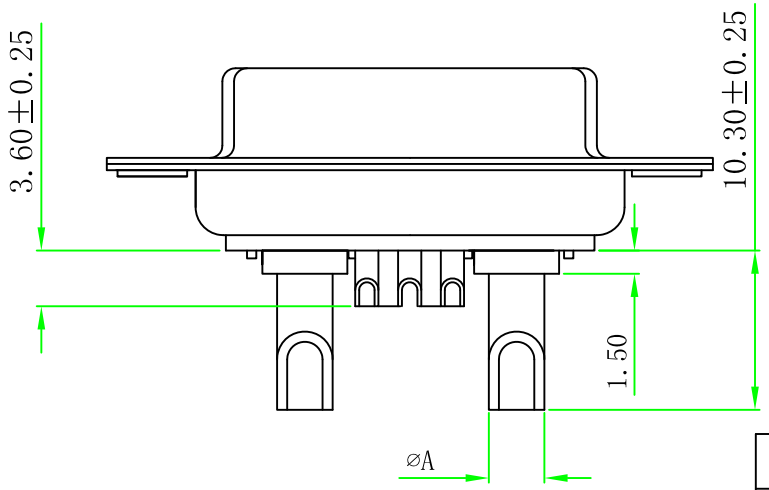

PO(X)	A	B	WIRE	CURRENTRATING(A)
1	2.5	4.5	12#	10
2	3.6	5.0	10#	20
3	4.4	5.5	8#	30
4	5.5	5.5	6#	40

设 计:	郭 威	品 名:	7W2母头 电流焊线式 光孔	
审 核:	姜 伟	图 号:	LL-005-0043	料 号: 005-07202xxx3x01
核 准:	陈 锐	日 期:	2022.04.18	单 位: mm
		比 例:	1:1	未注公差
		版 次:	A/0	X. ±0.50 X.° ±2° / X.X ±0.38 X.X° ±1° / X.XX ±0.25

Lianlink

东莞联立电子科技有限公司

Dongguan Lianlink electronics technology Co. Ltd